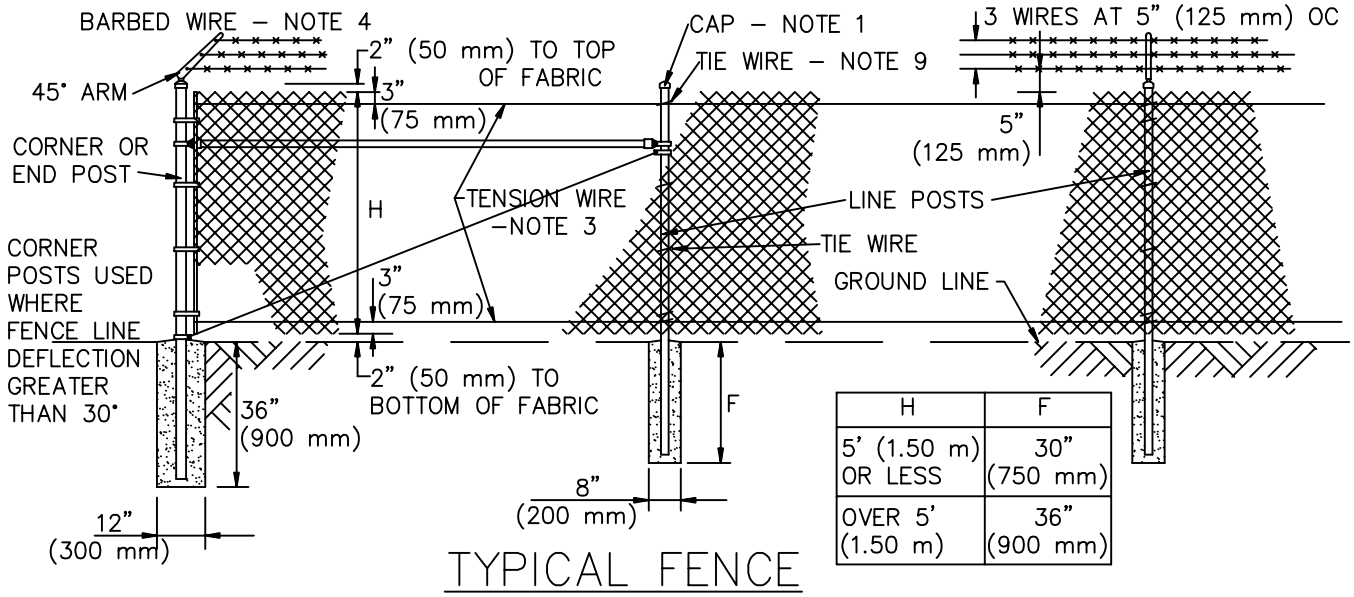

H	F
5' (1.50 m) OR LESS	30" (750 mm)
OVER 5' (1.50 m)	36" (900 mm)

TYPICAL FENCE

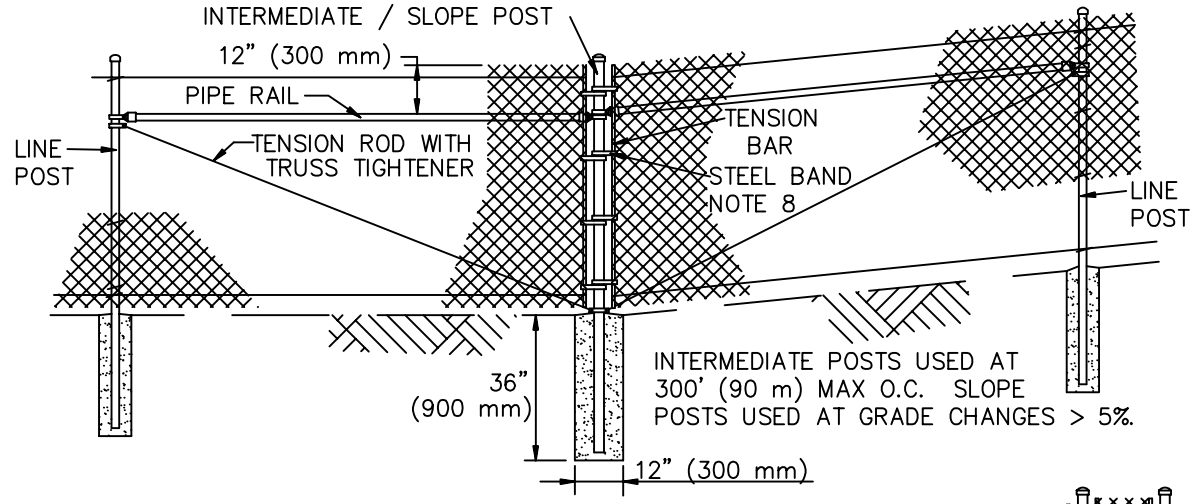

INTERMEDIATE / SLOPE POST

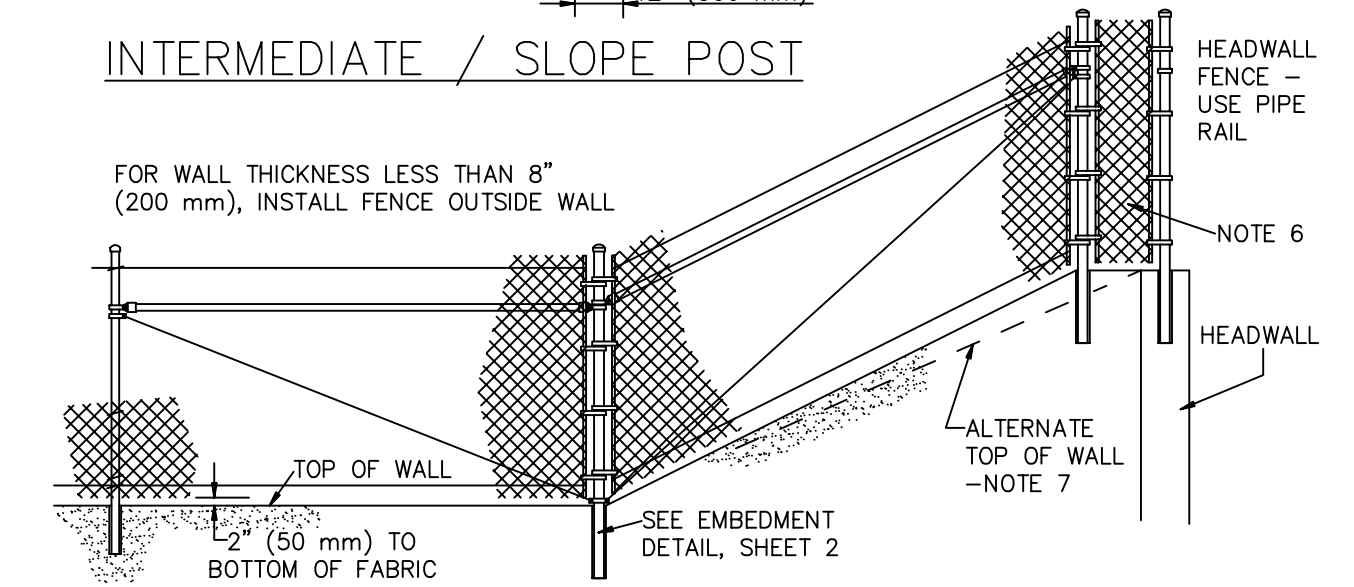

CHANNEL WALL AND WINGWALL AT HEADWALL

STANDARD PLANS FOR PUBLIC WORKS CONSTRUCTION

PROMULGATED BY THE PUBLIC WORKS STANDARDS INC. GREENBOOK COMMITTEE 1984 REV. 1996, 2005

CHAIN LINK FENCE AND GATES

USE WITH STANDARD SPECIFICATIONS FOR PUBLIC WORKS CONSTRUCTION

STANDARD PLAN 600–3

SHEET 1 OF 3

SEE OCPW STANDARD PLAN 600-3-OC FOR CONDITIONS

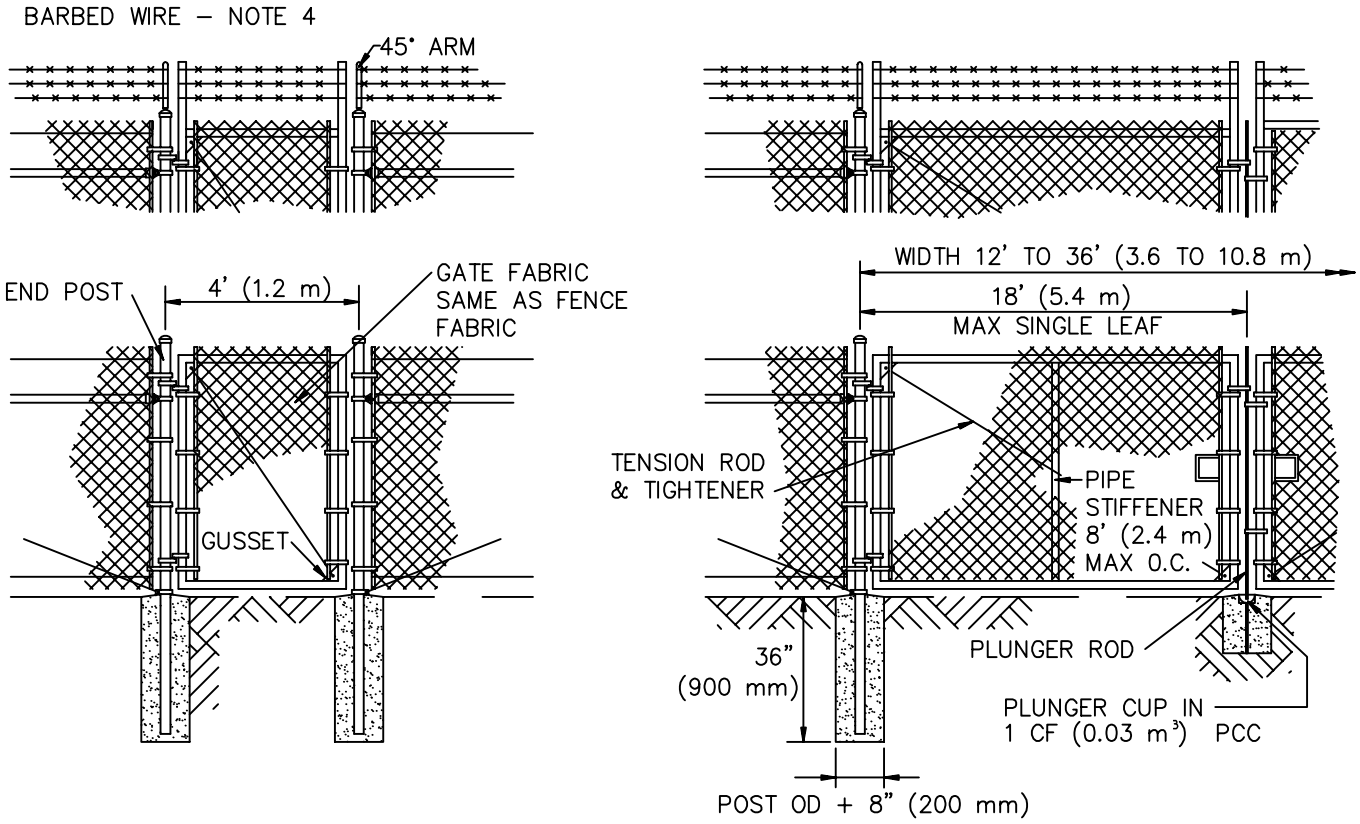

WALK GATE

DRIVE GATE

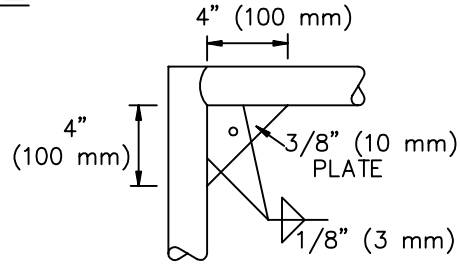

GUSSET

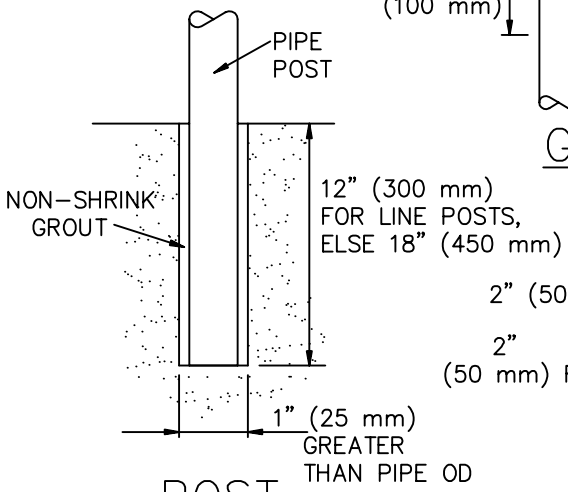

POST EMBEDMENT

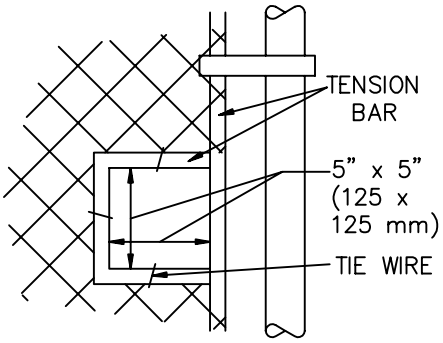

CHAIN AND LOCK CUT–OUT

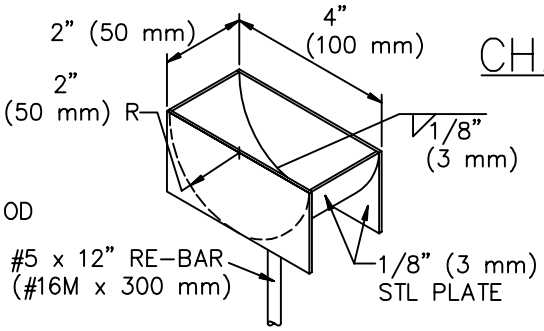

PLUNGER CUP ISOMETRIC

STANDARD PLANS FOR PUBLIC WORKS CONSTRUCTION	STANDARD PLAN
CHAIN LINK FENCE AND GATES	**600–3**
	SHEET 2 OF 3

SEE OCPW STANDARD PLAN 600-3-OC FOR CONDITIONS

NOTES:

1. SECURE DRIVE–FIT GALVANIZED CAP TO POST WITH 1/4" (6 mm) ROUND–HEAD RIVET.

2. H DENOTES FABRIC WIDTH AND NOMINAL FENCE HEIGHT. H = 5' (1.5 m) UNLESS OTHERWISE NOTED.

3. IF FENCE WITH TOP RAIL IS SPECIFIED, DELETE STEEL TENSION WIRE AT TOP, AND PIPE RAILS AT INTERMEDIATE, SLOPE, END AND CORNER POSTS. EXTEND TENSION ROD TO TOP RAIL.

4. BARBED WIRE SHALL BE USED ONLY WHEN SPECIFIED.

5. POST SPACING IS MAXIMUM 10' (3.0 m).

6. FILL CLEAR OPENINGS GREATER THAN 3" (75 mm) WITH FABRIC. FOR OPENINGS LESS THAN 18" (450 mm), TIE FABRIC TO POSTS.

7. USE ONE POST FOR COMBINED SLOPE AND CORNER POST IF TOP OF CHANNEL WALL IS CONSTRUCTED AS SHOWN FOR "ALTERNATE".

8. STEEL BANDS AT TENSION BARS SHALL BE 1/8" x 1" (3 x 25 mm), MINIMUM, SPACED AT MAXIMUM 16" (400 mm).

9. SECURE TENSION WIRES TO EACH LINE POST WITH TIE WIRES.

SEE OCPW STANDARD PLAN 600-3-OC FOR CONDITIONS

The following Standard Plans for Public Works Construction, 2009 Edition, of the Public Works Standards, Inc. have been adopted by OCPW with conditions which shall apply to OCPW use. The conditions are listed below.

SPPWC #	OCPW #	Name and Conditions
600-3	600-3-OC	Chain Link Fence and Gates

1. The chain link fence fabric shall be 9-gage for all fences, regardless of height, unless otherwise specified. Fabric shall have "knuckles" (not twists) at the top and bottom.

2. Construct fence with fabric side (outward side) 0.2 feet (60 mm) inside R/W (right-of-way) line. Place posts at least 2.5 feet (750 mm) from any R/W monument. R/W shall be identified and/or staked to the satisfaction of the Engineer prior to placing fence posts.

3. Chain link fence fabric shall be attached to the top and bottom tension wires at 18 inches (450 mm) on-center with 12-gage hog rings. Fabric shall be attached to posts and braces at 16 inches (400 mm) on-center with 9-gage aluminum wire.

4. Entry gates on flood control facilities shall be the maximum width possible (not to exceed 20 feet (600 mm)) within the R/W. All gates over 12 feet in width (3600 mm) shall be double leaf gates.

5. Gates shall be hung by two hinges for gates 10 feet-0 inch (3000 mm) or less and by three hinges for gates over 10 feet-0 inch (3000 mm). Gate hinges shall be an industrial hanger type hinge.

6. All gate frames are to be constructed of 1½ inches (35 mm) minimum, galvanized pipe.

7. Double leaf gates are to include two 5/16 inch x 18 inches (8 mm x 450 mm) galvanized chains, fillet welded to center of gate frame and cutout, conforming to Detail A on Sheet 2 of 3. Note: All fillet welds are to be coated with Cold Galvanizing Compound (95 percent Metallic Zinc by weight in dry film).

8. Single leaf gates are to include two 5/16 inch x 18 inches (8 mm x 450 mm) galvanized chains, fillet welded to center of latch post and cutout, conforming to Detail B on Sheet 3 of 3. Note: All fillet welds are to be coated with Cold Galvanizing Compound (95 percent Metallic Zinc by weight in dry film).

9. Materials for posts, rails, and braces shall conform to Table 206-6.2 (A) of the current issue of the Greenbook.

The following Standard Plans for Public Works Construction, 2009 Edition, of the Public Works Standards, Inc. have been adopted by OCPW with conditions which shall apply to OCPW use. The conditions are listed below.

SPPWC #	OCPW #	Name and Conditions
600-3	600-3-OC	Chain Link Fence and Gates

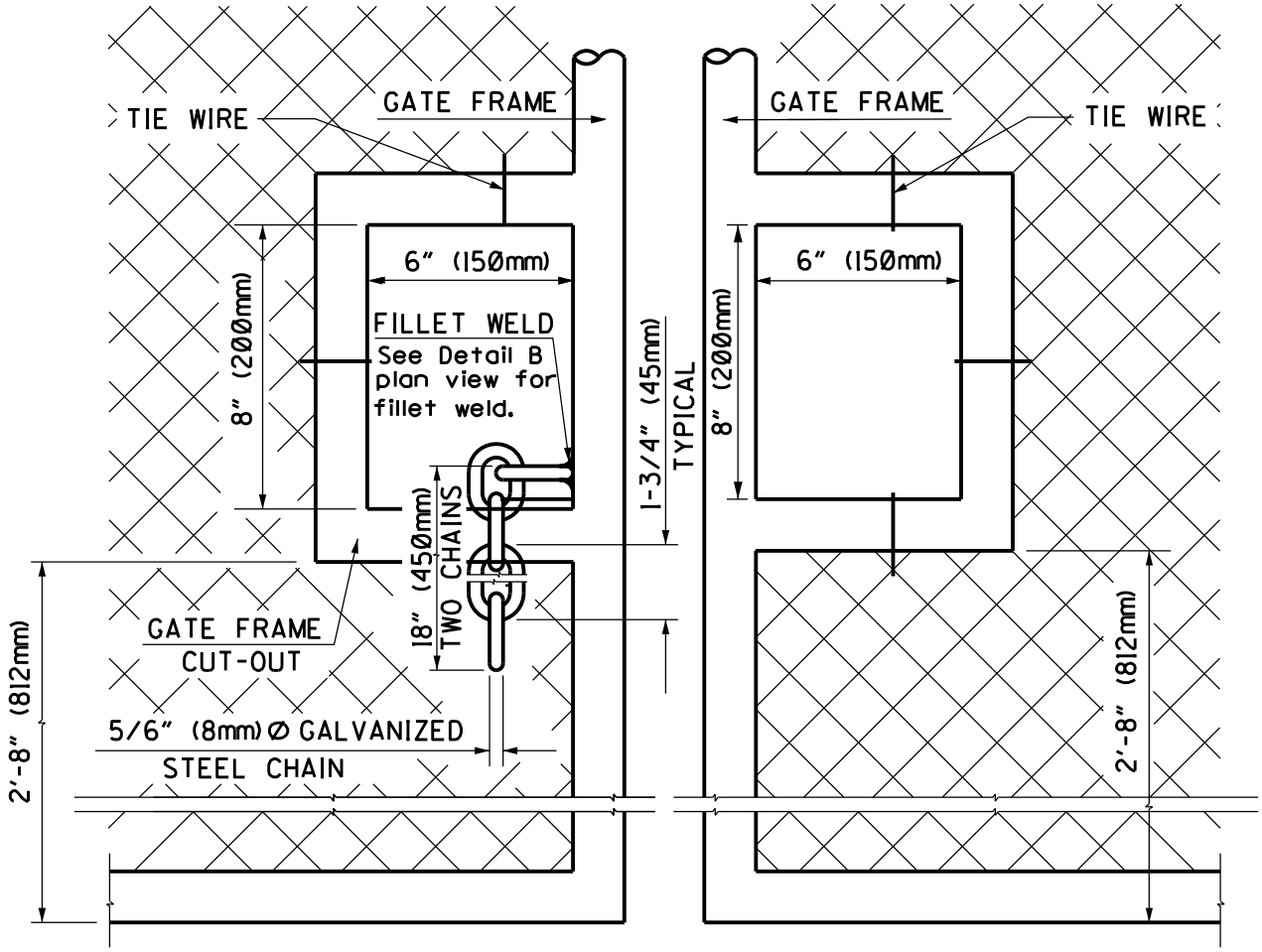

TYPICAL DOUBLE LEAF GATE FRAME, CHAIN AND LOCK CUT-OUT

DETAIL A
NTS

NOTE:
All gate frames and cut-outs shall be 1½" (38 mm) min. standard galv. pipe

COUNTY OF ORANGE, OC PUBLIC WORKS DEPARTMENT

Approved _____
Ignacio G. Ochoa, Chief Engineer

Revision: April 2013

STD. PLAN
600-3-OC

SPPWC STANDARD PLAN - CHAIN LINK FENCE AND GATES

SHT. 2 OF 3

The following Standard Plans for Public Works Construction, 2009 Edition, of the Public Works Standards, Inc. have been adopted by OCPW with conditions which shall apply to OCPW use. The conditions are listed below.

SPPWC #	OCPW #	Name and Conditions
600-3	600-3-OC	Chain Link Fence and Gates

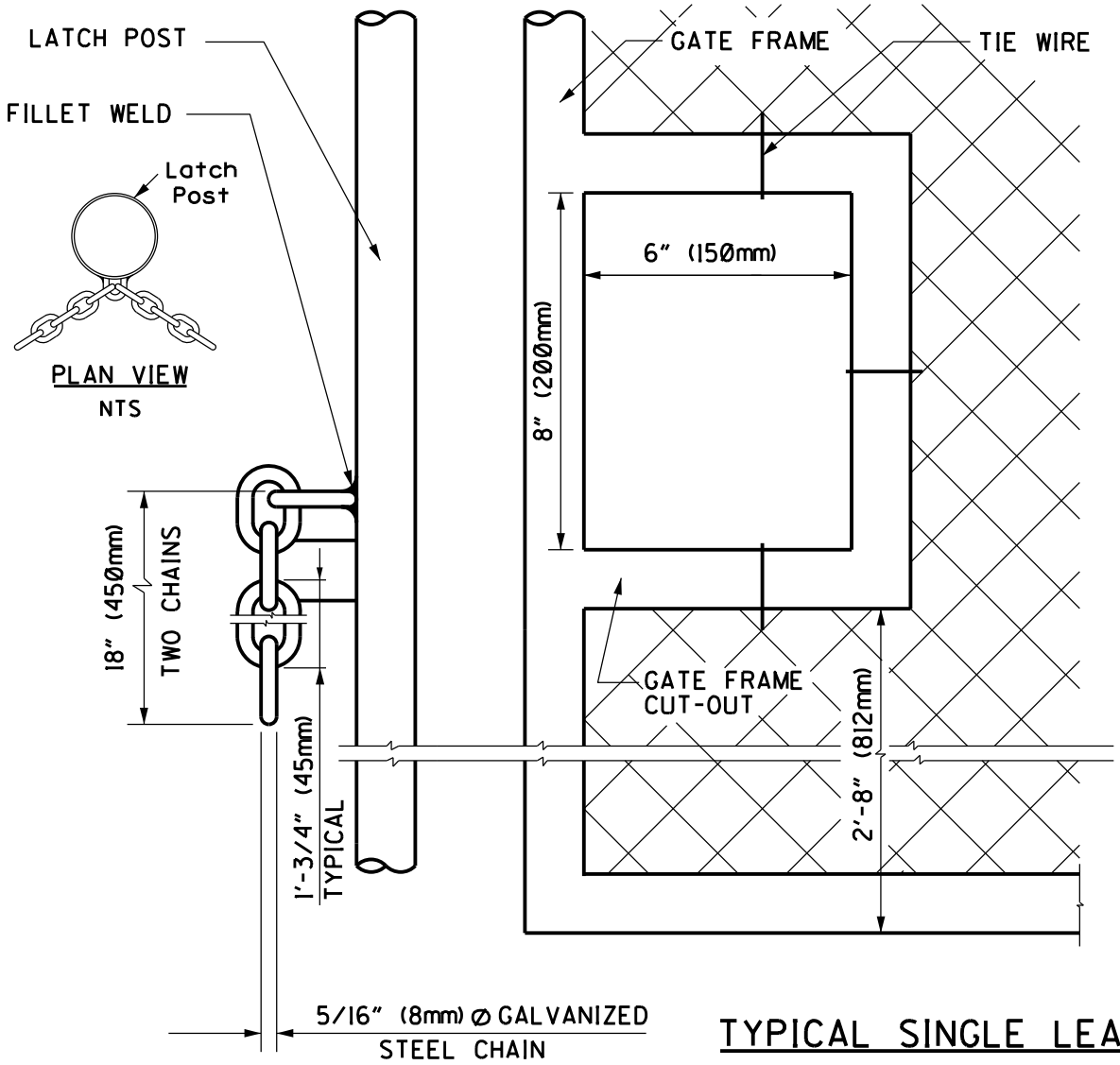

TYPICAL SINGLE LEAF

GATE FRAME, CHAIN AND LOCK CUT-OUT

DETAIL B

NTS

NOTE:

All gate frames and cut-outs shall be 1½" (38 mm) min. standard galv. pipe

COUNTY OF ORANGE, OC PUBLIC WORKS DEPARTMENT

Approved

Ignacio G. Ochoa, Chief Engineer

Revision: April 2013

STD. PLAN

600-3-OC

SPPWC STANDARD PLAN - CHAIN LINK FENCE AND GATES

SHT. 3 OF 3

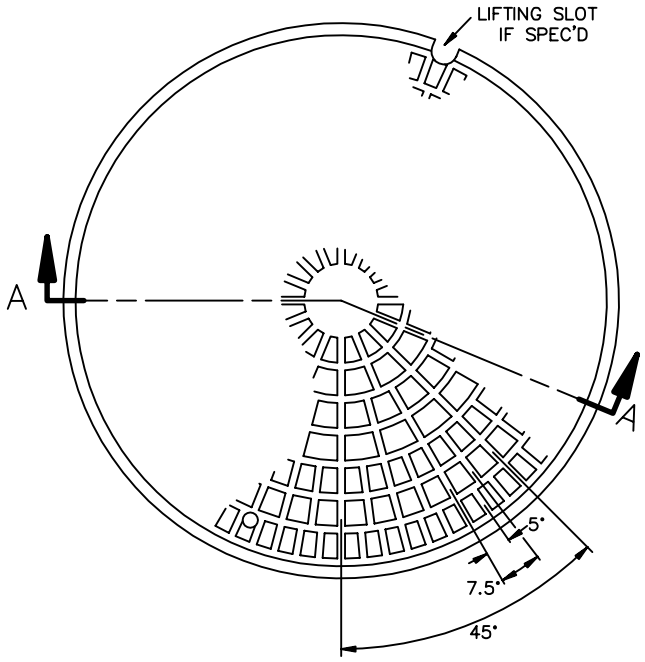

TOP OF COVER

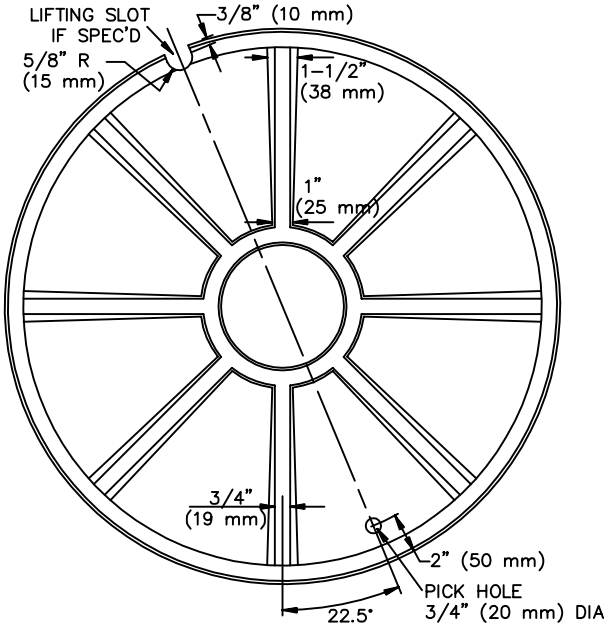

BOTTOM OF COVER

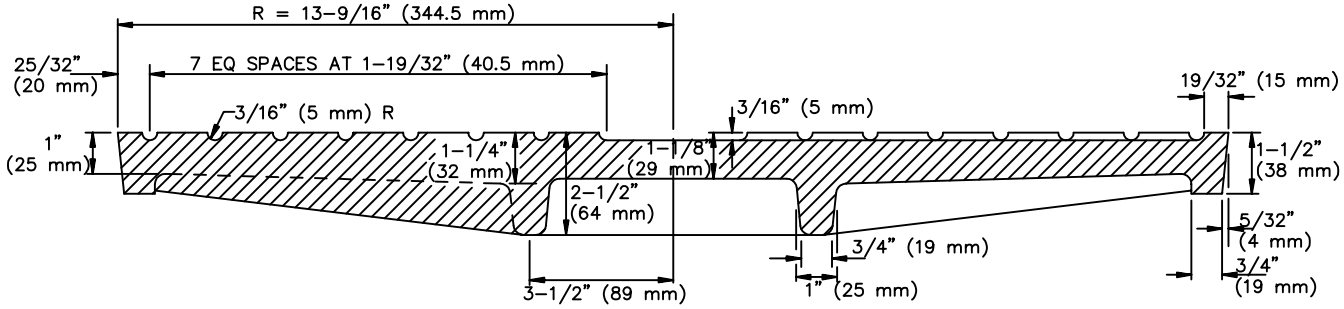

SECTION A–A

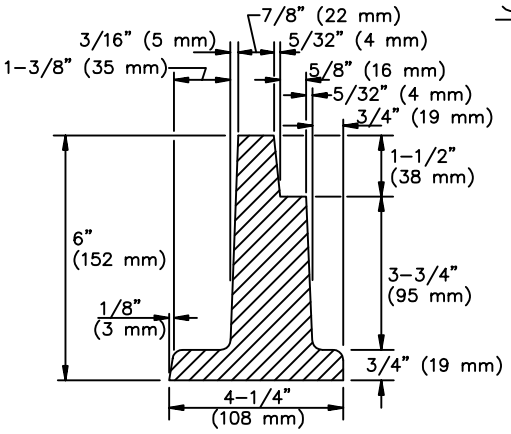

FRAME DETAIL

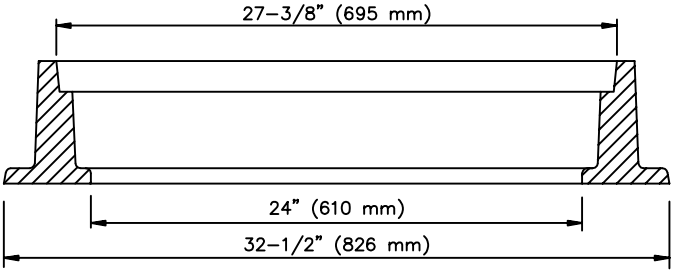

SECTION THRU FRAME

STANDARD PLANS FOR PUBLIC WORKS CONSTRUCTION		
PROMULGATED BY THE PUBLIC WORKS STANDARDS INC. GREENBOOK COMMITTEE 1984 REV. 1996, 2009	**24" (610 mm) MANHOLE FRAME AND COVER**	STANDARD PLAN **630-3**
	USE WITH STANDARD SPECIFICATIONS FOR PUBLIC WORKS CONSTRUCTION	SHEET 1 OF 2

SEE OCPW STANDARD PLAN 630-3-OC FOR CONDITIONS

NOTES:

1. THE CAST IRON USED SHALL CONFORM TO ASTM A–48 CLASS 35B.

2. COVERS SHALL BE CAST WITH THE LETTER "D" FOR STORM DRAINS AND "S" FOR SEWERS, AND THE AGENCY'S IDENTIFICATION IN ACCORDANCE WITH INSTRUCTIONS FURNISHED BY THE AGENCY. THE LETTER "D" OR "S" SHALL BE APPROXIMATELY 2–1/2" (65 mm) HIGH WITH 1/2" (15 mm) LINE WIDTH, AND PLACED IN THE CENTER OF THE COVER. ALL LETTERS SHALL BE FLUSH WITH THE FINISHED SURFACE OF THE COVER.

3. FOUNDRY IDENTIFYING MARK, HEAT AND DATE SHALL BE CAST ON THE BOTTOM OF THE COVER AND ON THE INSIDE OF THE FRAME.

4. IMPORTED COVERS AND FRAMES SHALL HAVE THE COUNTRY OF ORIGIN MARKING IN COMPLIANCE WITH FEDERAL REGULATIONS.

5. WEIGHT OF FRAME SHALL BE 260 LBS (118 kg). WEIGHT OF COVER SHALL BE 175 LBS (79 kg). ACTUAL WEIGHTS SHALL BE WITHIN A RANGE OF 95% TO 110%.

6. THE MANHOLE FRAME AND COVER SHALL BE INSPECTED BY THE ENGINEER PRIOR TO SHIPMENT TO THE JOBSITE. ACCEPTANCE WILL BE INDICATED BY THE AGENCY'S MARK.

7. THE PROOF–LOAD FOR TEST METHOD B OF SSPWC 206–3.2 IS 40,700 LBS (180 kN).

8. COVERS FOR MANHOLES LOCATED IN EASEMENTS, ALLEYS, PARKWAYS AND ALL PLACES OTHER THAN PAVED STREETS SHALL BE PROVIDED WITH SOCKET–SET SCREW LOCKING DEVICES. DRILL AND TAP TWO HOLES TO A DEPTH OF 1" (25 mm) AT 90 DEGREES TO PICK HOLE AND INSTALL 3/4" x 3/4" (20 x 20 mm) STAINLESS STEEL SOCKET–SET SCREWS WITH 3/8" (10 mm) RECESSED HEX HEAD. ALL THREADS SHALL BE N.C.

SEE OCPW STANDARD PLAN 630-3-OC FOR CONDITIONS

The following Standard Plans for Public Works Construction, 2009 Edition, of the Public Works Standards, Inc. have been adopted by OCPW with conditions which shall apply to OCPW use. The conditions are listed below.

SPPWC #	OCPW #	Name and Conditions
630-3	630-3-OC	24" (610 mm) Manhole Frame and Cover

1. A certificate of compliance stating that the manhole frame(s) and cover(s) furnished comply in all respects with the requirements of the specifications. Such certificates shall be signed by the manufacturer, shall clearly identify the lot on the certificate and shall be furnished with each lot.

   Manhole frame(s) and cover(s) produced outside the United States shall be furnished with a certificate of compliance along with complete copies of all tests and test results from a private testing firm located within California at no additional expense to the Agency. The testing firm shall be experienced in and knowledgeable of the testing of manhole frames and covers and shall provide proof of liability insurance for an amount not less than $500,000 in a form acceptable to County's Risk Management.

COUNTY OF ORANGE, OC PUBLIC WORKS DEPARTMENT

Approved _____
Ignacio G. Ochoa, Chief Engineer

Revision: April 2013

STD. PLAN

630-3-OC

SPPWC STANDARD PLAN - 24" MANHOLE FRAME AND COVER

SHT. 1 OF 1

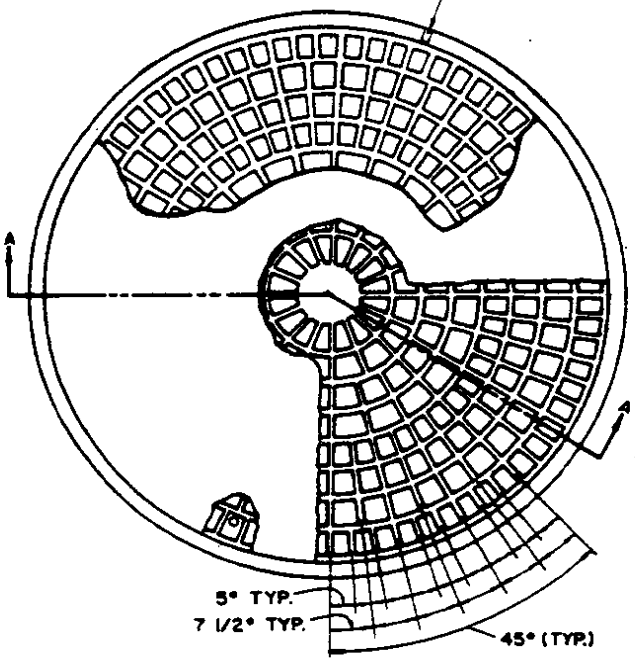

COVER FOR 36" CLEAR OPENING FRAME

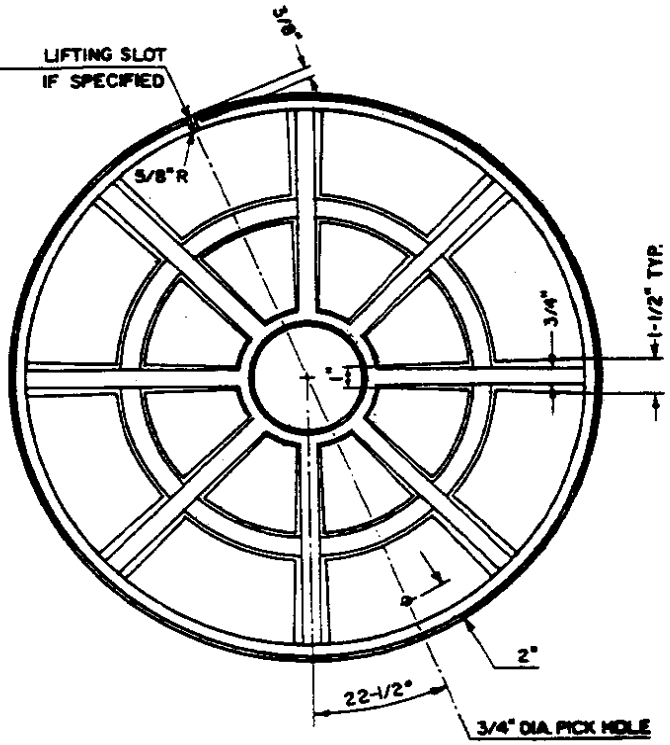

BOTTOM PLAN OF COVER

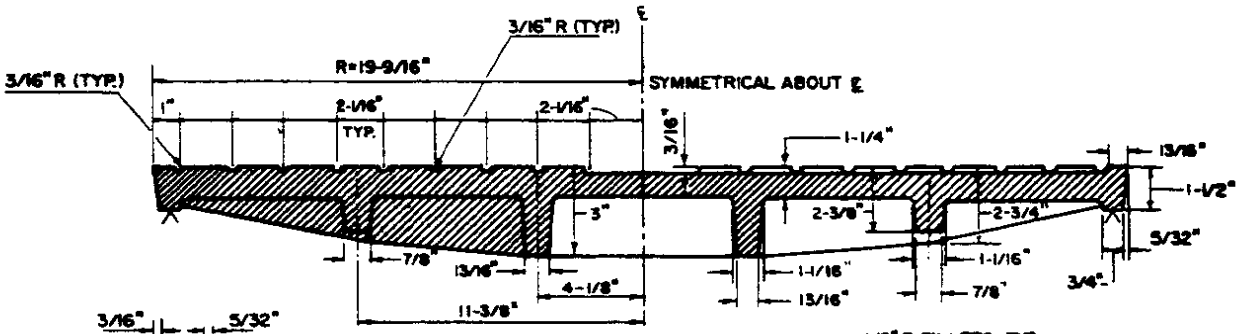

SECTION A-A

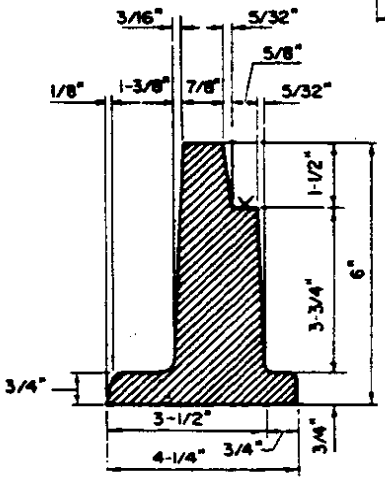

DETAIL OF FRAME

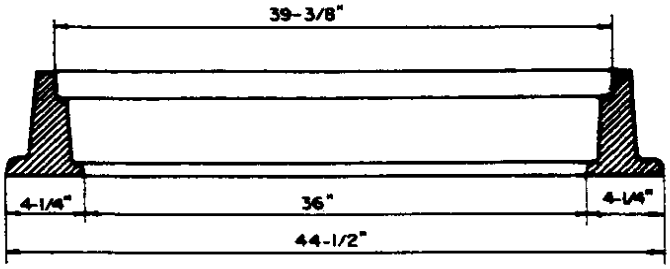

SECTION THRU FRAME

AMERICAN PUBLIC WORKS ASSOCIATION – SOUTHERN CALIFORNIA CHAPTER		
PROMULGATED BY THE APWA-AGC JOINT COOPERATIVE COMMITTEE 1984	**36-INCH MANHOLE FRAME AND COVER**	STANDARD PLAN **633-1**
	USE WITH STANDARD SPECIFICATIONS FOR PUBLIC WORKS CONSTRUCTION	SHEET 1 OF 2

SEE OCPW STANDARD PLAN 633-1-OC FOR CONDITIONS

NOTES:

1. THE CAST IRON USED SHALL CONFORM WITH ASTM A-48 CLASS 35B.
2. THE FRAME AND COVER SHALL BE COATED WITH ASPHALTUM OR BITUMINOUS PAINT AFTER TESTING AND INSPECTION.
3. COVERS SHALL BE CAST WITH THE LETTER "D" FOR STORM DRAINS AND "S" FOR SEWERS AND THE AGENCY'S IDENTIFICATION IN ACCORDANCE WITH INSTRUCTIONS FURNISHED BY THE AGENCY. THE LETTER "D" OR "S" SHALL BE APPROXIMATELY 2½ INCHES HIGH WITH ½-INCH LINE WIDTH AND PLACED IN THE CENTER OF THE COVER. ALL LETTERS SHALL BE FLUSH WITH THE FINISHED SURFACE OF THE COVER.
4. FOUNDRY IDENTIFYING MARK, HEAT AND DATE SHALL BE CAST ON THE BOTTOM OF THE COVER AND ON THE INSIDE OF THE FRAME.
5. IMPORTED COVERS AND FRAMES SHALL HAVE THE COUNTRY OF ORIGIN MARKING IN COMPLIANCE WITH FEDERAL REGULATIONS.
6. WEIGHT OF FRAME SHALL BE 425 POUNDS. WEIGHT OF COVER SHALL BE 480 POUNDS. ACTUAL WEIGHTS SHALL BE WITHIN A RANGE OF 95% TO 110%.
7. THE MANHOLE FRAME AND COVER SHALL BE INSPECTED BY THE ENGINEER PRIOR TO SHIPMENT TO THE JOB SITE. ACCEPTANCE WILL BE INDICATED BY THE AGENCY'S MARK.
8. THE PROOF LOAD FOR TEST METHOD B OF THE STANDARD SPECIFICATIONS IS 49,700 POUNDS.
9. COVERS FOR MANHOLES LOCATED IN EASEMENTS, ALLEYS, PARKWAYS AND ALL OTHER PLACES EXCEPT PAVED STREETS SHALL BE PROVIDED WITH SOCKET SET SCREW LOCKING DEVICES. DRILL AND TAP TWO HOLES TO A DEPTH OF ONE INCH AT 90 DEGREES TO PICK HOLE AND INSTALL ¾-INCH X ¾-INCH STAINLESS STEEL SOCKET SET SCREWS WITH ⅜-INCH RECESSED HEX HEAD. ALL THREADS SHALL BE N.C.

AMERICAN PUBLIC WORKS ASSOCIATION – SOUTHERN CALIFORNIA CHAPTER	STANDARD PLAN
36-INCH MANHOLE FRAME AND COVER	**633-1** SHEET 2 OF 2

SEE OCPW STANDARD PLAN 633-1-OC FOR CONDITIONS

The following Standard Plans for Public Works Construction, 1985 Edition, of the American Public Works Association (Southern California Chapter) and Associated General Contractors of California (Southern California Districts) have been adopted by OCPW with conditions which shall apply to OCPW use. The conditions are listed below.

SPPWC #	OCPW #	Name and Conditions
633-1	633-1-OC	36" Manhole Frame and Cover

1. A certificate of compliance stating that the manhole frame(s) and cover(s) furnished comply in all respects with the requirements of the specifications. Such certificates shall be signed by the manufacturer, shall clearly identify the lot on the certificate and shall be furnished with each lot.

   Manhole frame(s) and cover(s) produced outside the United States shall be furnished with a certificate of compliance along with complete copies of all tests and test results from a private testing firm located within Calif. at no additional expense to the Agency. The testing firm shall be experienced in and knowledgeable of the testing of manhole frames and covers and shall provide proof of liability insurance for an amount not less than $500,000 in a form acceptable to County's Risk Management.

2. SPPWC Std. Plan 633-2 and 633-3 have not been approved for use in Orange County.

COUNTY OF ORANGE, OC PUBLIC WORKS DEPARTMENT

Approved _____
Ignacio G. Ochoa, Chief Engineer

Revision: April 2013

STD. PLAN

633-1-OC

SPPWC STANDARD PLAN - 36" MANHOLE FRAME AND COVER

SHT. 1 OF 1